RoHS COMPLIANT

REVISIONS				
ZONE	REV	DESCRIPTION	DATE	APPROVED
	A	INITIAL DESIGN	2009/06/19	Hsiu Hsien Kuo

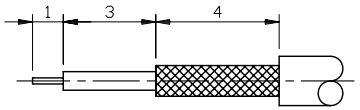

RECOMMENDED
CABLE STRIPPING DIM

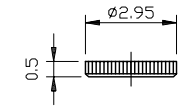

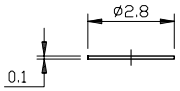

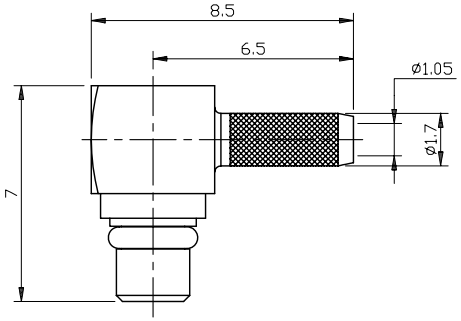

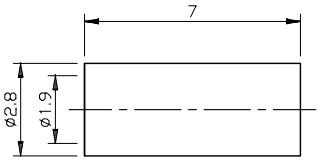

NO	DESCRIPTION	MATERIAL	FINISH	Q'TY	DRAWN NO.
07	FERRULE	BRASS	GOLD	1	
06	PIN	BRASS	GOLD	1	
05	RING	BERYLLIUM COPPER	GOLD	1	
04	INSULATOR B	TEFLON	NONE	1	
03	BODY	BRASS	GOLD	1	
02	INSULATOR A	DELRIN	NONE	1	
01	COVER	BRASS	GOLD	1	

Wellshow Technology Co., Ltd
TEL:+886-2-24270488 FAX:+886-2-24260387
Http://www.rfcoaxcable.com

TITLE: MMCX R/A Plug Crimp for 1.32 Cable

DWG NO.	CUSTOMER P/N	UNIT	REV.
C05BA3F132001		mm	A

GENERAL TOLERANCES (UNLESS OTHERWISE SPECIFIED)

.X	±0.2
.XX	±0.2
.XXX	±0.2
ANGLES	±3°

		APPROVALS	DATE
SCALE	Free		
SIZE	A4	DRAWN BY: Hsiu Hsien Kuo	2009/06/19
		CHK'D BY: Kevin	2009/06/19
SHEET	1 of 1	APP'D BY: Jared	2009/06/19