RoHS

Wellshow Technology

www.wellshow.com

REV	DESCRIPTION	DATE
1.30	NEW DRAWING FRAME	2023/07/31
1.40	CORRECT INSULATION RESISTANCE	2023/11/17

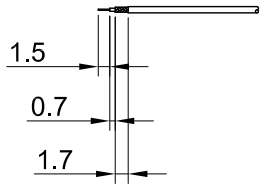

RECOMMENDED
STRIP LENGTHS

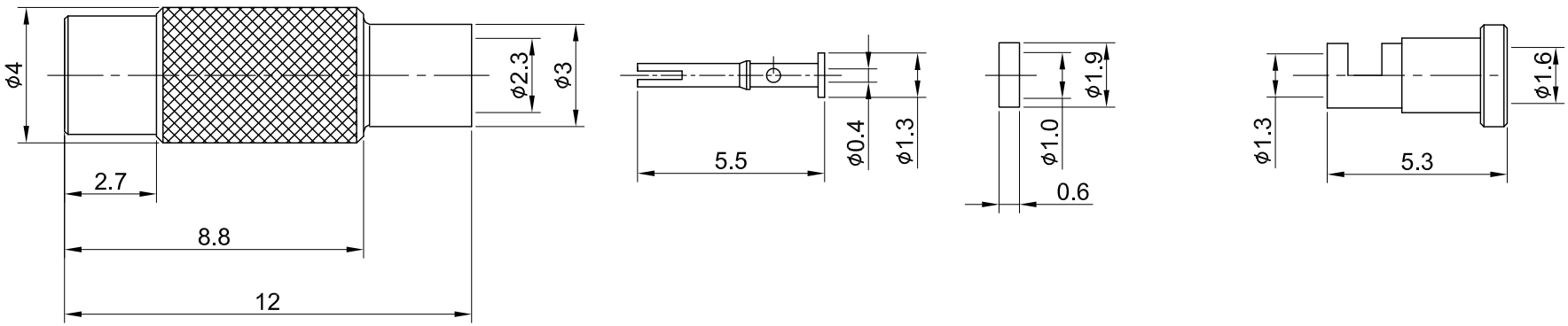

MECHANICAL DATA
DURABILITY : 500 CYCLES
TEMPERATURE RANGE : -65˚C ~ + 165˚C

ELECTRICAL DATA
FREQUENCY RANGE: DC~6GHz
IMPEDANCE : 50Ω
VSWR : 1.3 MAX.
WORKING VOLTAGE : AC 170V
WITHSTANDING VOLTAGE : AC 500V
INSULATION RESISTANCE : 1000 MΩ MIN

NO	DESCRIPTION	MATERIAL	FINISH	Q'TY
05	FERRULE	BRASS	GOLD	1
04	INSULATOR B	TEFLON	NONE	1
03	CENTER PIN	Be.Cu	GOLD	1
02	INSULATOR A	TEFLON	NONE	1
01	BODY	BRASS	GOLD	1

TITLE
MMCX(F) st. crimp type for 1.37 cable

DWG NO.
C06AA3F137006C

CUST.
P/N: N/A
DWG NO: N/A

SHEET 1 of 1 Unit: mm

Wellshow

GENERAL TOLERANCES
.X ±0.2
.XX ±0.2
.XXX ±0.2
ANGLES N/A

DRAWN BY: Lottie 2023/11/17
CHK'D BY: Kana 2023/11/17

DA2311160014

REV. 1.40