RoHS

Wellshow Technology

www.wellshow.com

REV	DESCRIPTION	DATE
3.10	NEW DRAWING FRAME	2023/09/08
3.20	CORRECT INSULATION RESISTANCE	2023/11/15

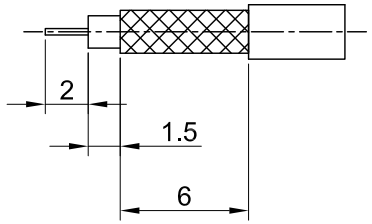

RECOMMENDED
STRIP LENGTHS

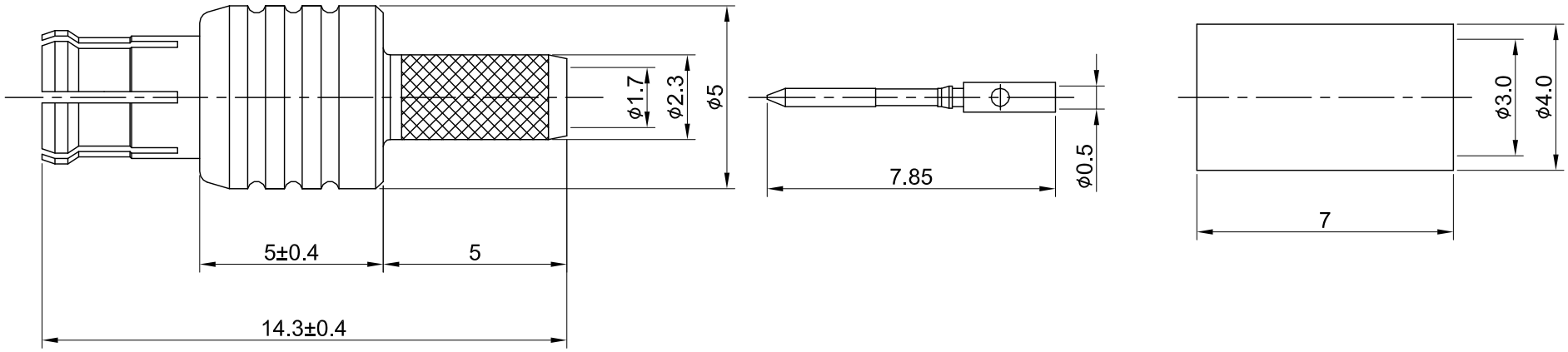

MECHANICAL DATA
TEMPERATURE RANGE : -65˚C ~ + 165˚C

ELECTRICAL DATA
FREQUENCY RANGE: DC~3GHz
IMPEDANCE : 75Ω
VSWR : 1.3 MAX.
WORKING VOLTAGE : AC 335V
WITHSTANDING VOLTAGE : AC 500V
INSULATION RESISTANCE : 1000 MΩ MIN

NO	DESCRIPTION	MATERIAL	FINISH	Q'TY
05	FERRULE	BRASS	GOLD	1
04	BODY B	BRASS	GOLD	1
03	CENTER PIN	BRASS	GOLD	1
02	INSULATOR	TEFLON	NONE	1
01	BODY A	Be.Cu	GOLD	1

TITLE
MCX(M) st. crimp for RG179 (75ohm)

DWG NO.
C07OA3F179004

CUST.
P/N: N/A
DWG NO: N/A

SHEET 1 of 1

Unit: mm

Wellshow

GENERAL TOLERANCES
.X ±0.2
.XX ±0.2
.XXX ±0.2
ANGLES N/A

DRAWN BY: Lottie 2023/11/15
CHK'D BY: Dora 2023/11/15

DA2311090021

REV. 3.20