RoHS

Wellshow Technology

www.wellshow.com

REV	DESCRIPTION	DATE
1.40	CHG FERRULE DESIGN, BODY LENGTHENING	2021/01/07
1.50	NEW DRAWING FRAME	2024/03/21

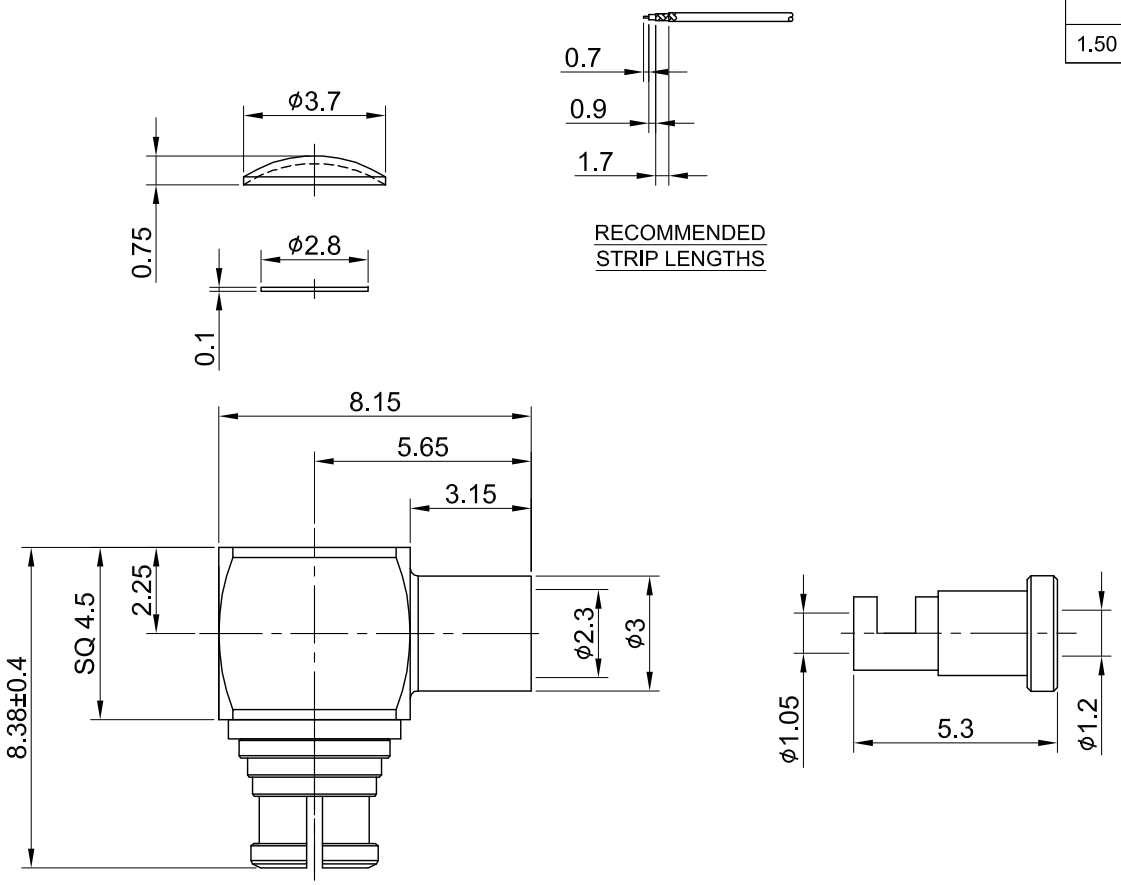

MECHANICAL DATA
DURABILITY : 500 CYCLES
TEMPERATURE RANGE : -40°C ~ + 85°C

ELECTRICAL DATA
FREQUENCY RANGE: DC~6GHz
IMPEDANCE : 50Ω
VSWR : 1.5 MAX.
WORKING VOLTAGE : AC 335V
WITHSTANDING VOLTAGE : AC 500V
INSULATION RESISTANCE : 5000 MΩ MIN

NO	DESCRIPTION	MATERIAL	FINISH	Q'TY
08	FERRULE	BRASS	GOLD	1
07	INSULATOR	TEFLON	NONE	1
06	ROCK RING	Be.Cu	GOLD	1
05	CENTER PIN	Be.Cu	GOLD	1
04	COVER	BRASS	GOLD	1
03	CUBE BODY	BRASS	GOLD	1
02	INSULATOR COVER	POM	NONE	1
01	BODY	Be.Cu	GOLD	1

TITLE
SMP(F) ra. crimp type for 1.13/1.13LL cable

DWG NO.
C60BA3F113001A

Wellshow

CUST.
P/N: N/A
DWG NO: N/A

SHEET 1 of 1 Unit: mm

GENERAL TOLERANCES
.X ±0.2
.XX ±0.2
.XXX ±0.2
ANGLES N/A

DRAWN BY: Kelly 2024/03/21
CHK'D BY: Dora 2024/03/21

DA2402050065

REV. 1.50