RoHS

Wellshow Technology

www.wellshow.com

REV	DESCRIPTION	DATE
2.00	UPDATE DRAWING	2023/03/13
2.10	NEW DRAWING FRAME	2023/10/27

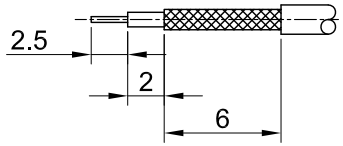

RECOMMENDED
STRIP LENGTHS

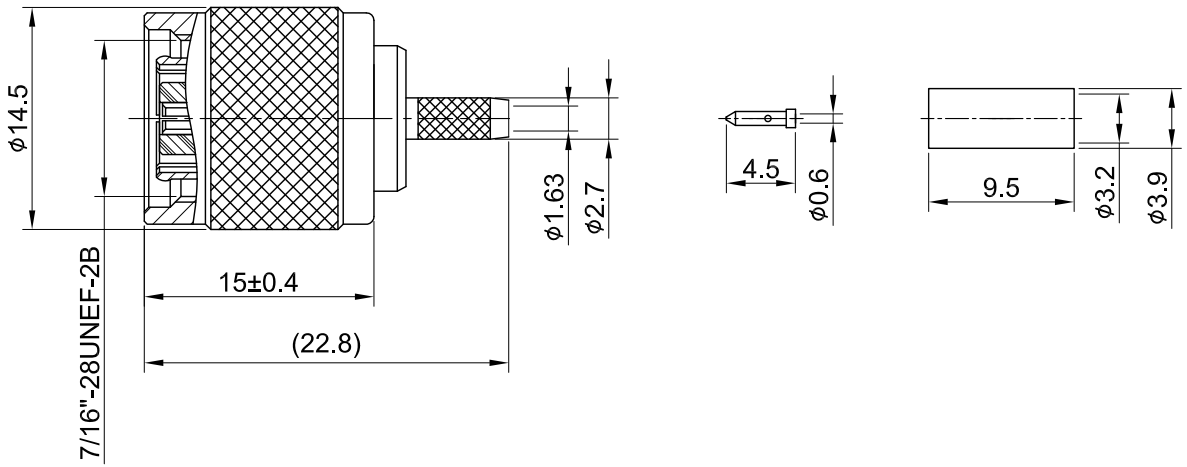

NO	DESCRIPTION	MATERIAL	FINISH	Q'TY
11	FERRULE	BRASS	NICKEL	1
10	BULLET CONTACT	BRASS	GOLD	1
09	CABLE BODY	BRASS	NICKEL	1
08	CENTER PIN	P.BRONZE	GOLD	1
07	INSULATOR	TEFLON	NONE	1
06	BODY	BRASS	NICKEL	1
05	WASHER B	BRASS	NICKEL	1
04	INNER RETAINING RING	BRASS	NICKEL	1
03	WASHER A	BRASS	NICKEL	1
02	GASKET	SILICONE RUBBER	RED	1
01	SHELL	BRASS	NICKEL	1

MECHANICAL DATA
DURABILITY : 100 CYCLES
TEMPERATURE RANGE : -65°C ~ + 165°C

ELECTRICAL DATA
FREQUENCY RANGE: DC~6GHz
IMPEDANCE : 50Ω
VSWR : 1.5 MAX.
WORKING VOLTAGE : AC 500V
WITHSTANDING VOLTAGE : AC 1500V
INSULATION RESISTANCE : 5000 MΩ MIN

TITLE
RP TNC Straight male for RG316 (pin in pin)

DWG NO.
C25CA3F174002B

Wellshow

CUST.
P/N: N/A
DWG NO: N/A

SHEET 1 of 1 Unit: mm

GENERAL TOLERANCES
.X ±0.2
.XX ±0.2
.XXX ±0.2
ANGLES N/A

DRAWN BY: Kelly 2023/10/27
CHK'D BY: David 2023/10/27

DA2310270003

REV. 2.10